Product Data Sheet

Code:	**LIFE-MG-7TR**
Power:	7W
LED Chip:	bridgelux
CRI:	>90
CCT:	3000K
Net Weight:	
Body Material :	Aluminium
Input Voltage :	DC48V
Luminous Flux:	520±5%lm(3000K)
Adjustable Angle :	0°- 90°Vertical Aiming Tilt 0°- 350°horizontal Rotation

DIMENSION

Unit: mm

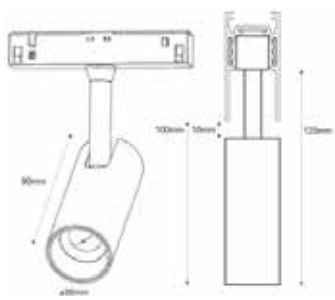

PHOTOMETRIC DIAGRAM

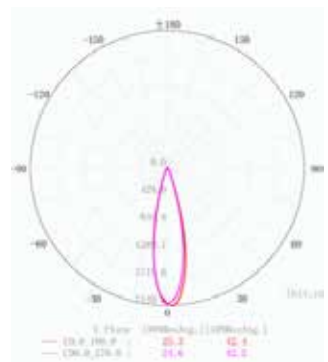

COLOR:

Sand black